Rollerco Number	Part Name
5-1120	Showcase/Godwin Window Catch

Description

Window handle catch to suit old Showcase & Godwin sliding windows.

Picture

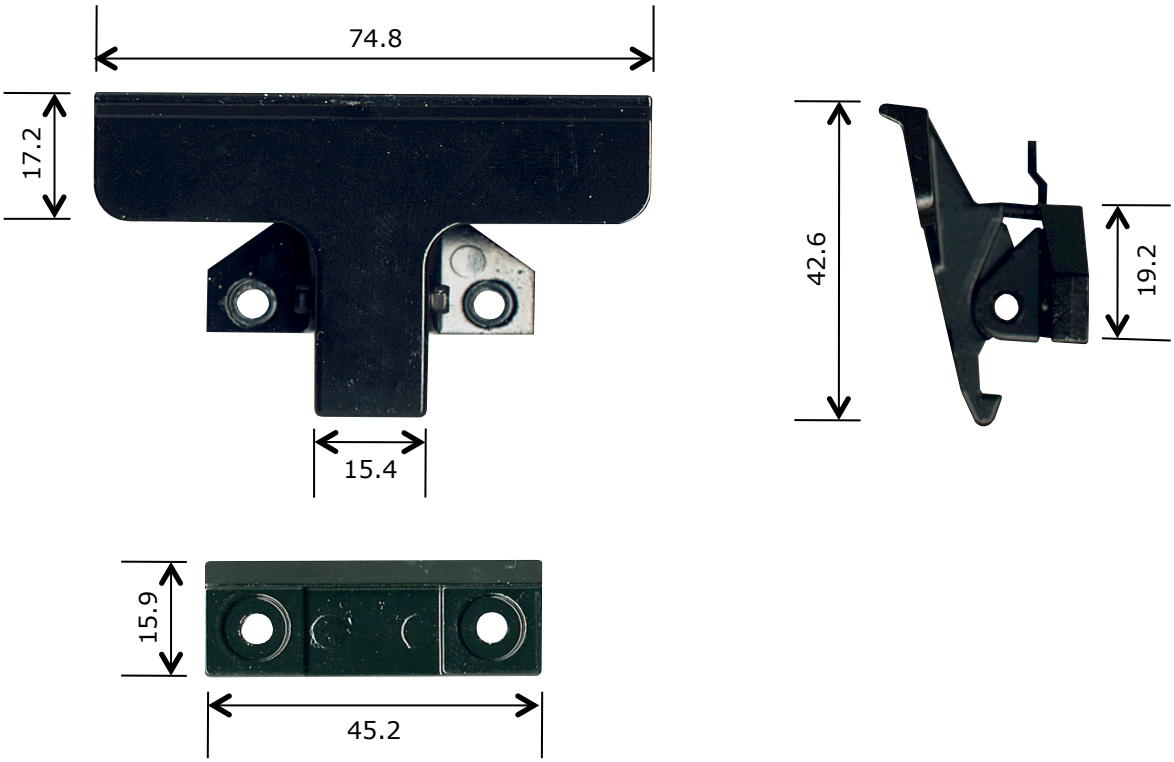

Notes / Comments

Black powder coated 2 piece zinc die cast pivoting handle with locking lever and strike plate.

Unit of Supply	Recommended Maximum Load	Adjustment Range
Each	N/A	N/A

ROLLERCO
3, 26-28 Jacobsen Crescent, Holden Hill, South Australia 5088
P: 08 8266 2554 F: 08 8266 1522 E: sales@rollerco.com.au

Reproduction of this document in any part is not allowed without the written consent of Rollerco. Whilst all care has been taken in it's accuracy, Rollerco accept no liability for any errors.